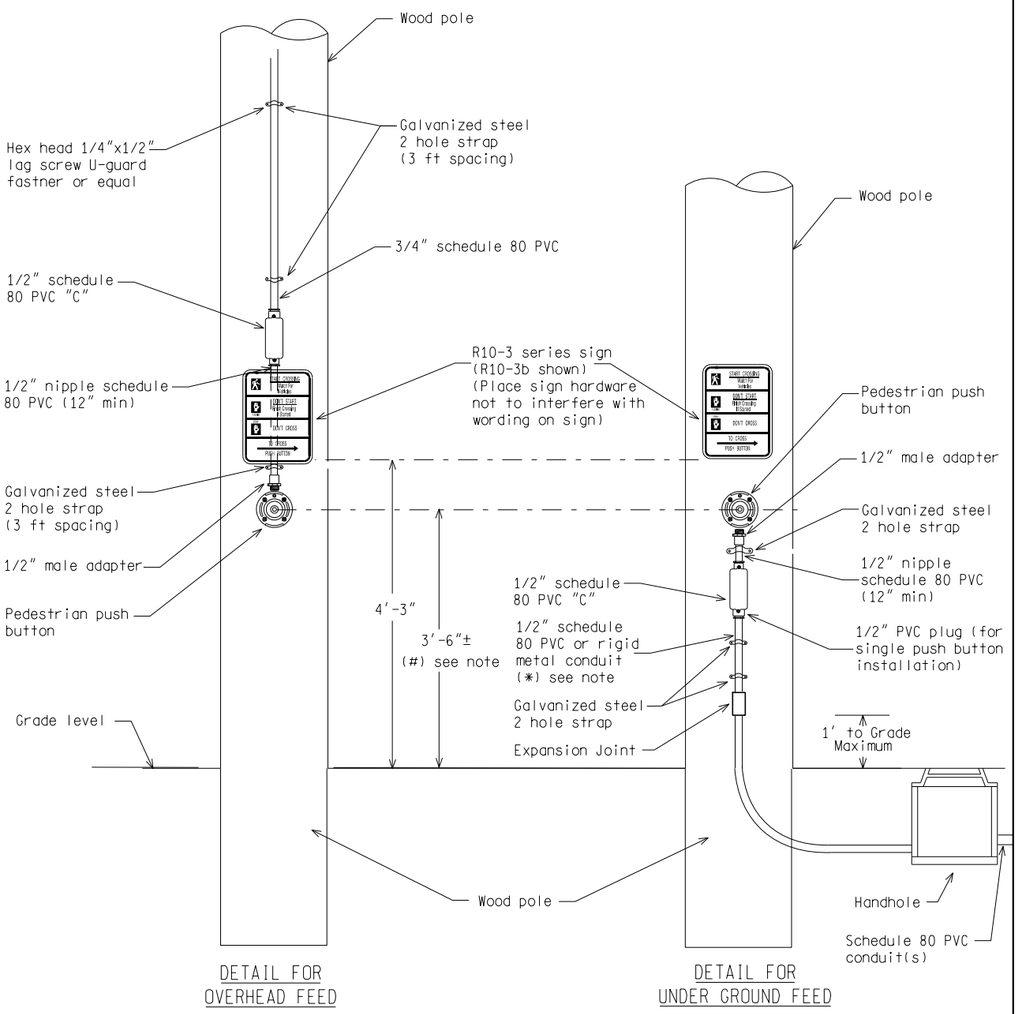

Note: (*) For projects maintained by the Wayne Co. Department of Public Services (WCDPS), use rigid metal for conduit(s) from grade level to 10' (min.) above grade or as directed by the Engineer.

(#) If pushbutton is from 10" to 24" from edge of sidewalk an acceptable range is 38" to 46"

PEDESTRIAN PUSH BUTTON DETAILS ON WOOD POLE

NOT TO SCALE

File: RefDoc/TR/Signals/Web/Sp Det/Fin/SIG400A.dgn Rev. 02/16/17

MDOT Michigan Department of Transportation

PREPARED BY TRAFFIC AND SAFETY

DRAWN BY:

CHECKED BY:

ENGINEER OF DELIVERY

ENGINEER OF DEVELOPMENT

(SPECIAL DETAIL)

FHWA APPROVAL DATE

MICHIGAN DEPARTMENT OF TRANSPORTATION
BUREAU OF HIGHWAYS DELIVERY STANDARD PLAN FOR

PEDESTRIAN PUSH BUTTON DETAILS

PLAN DATE

SIG-400-A

SHEET 1 of4

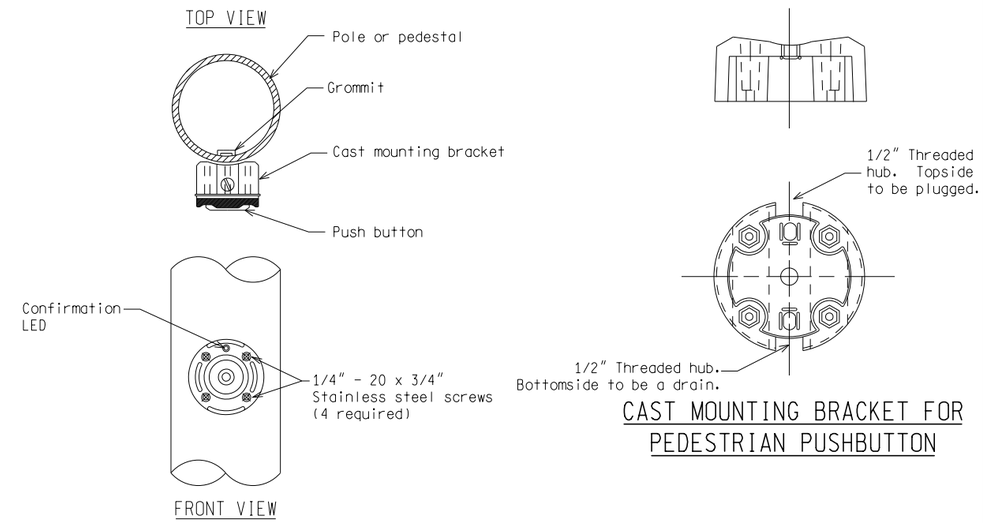

CAST MOUNTING BRACKET FOR PEDESTRIAN PUSHBUTTON

PEDESTRIAN PUSHBUTTON INSTALLATION ON STEEL POLE OR PEDESTAL

NOTES:

1) Alternate foundation may be constructed 22"x22" square - 48" deep.

2) Grounding system shall measure 10 ohm or less to ground.

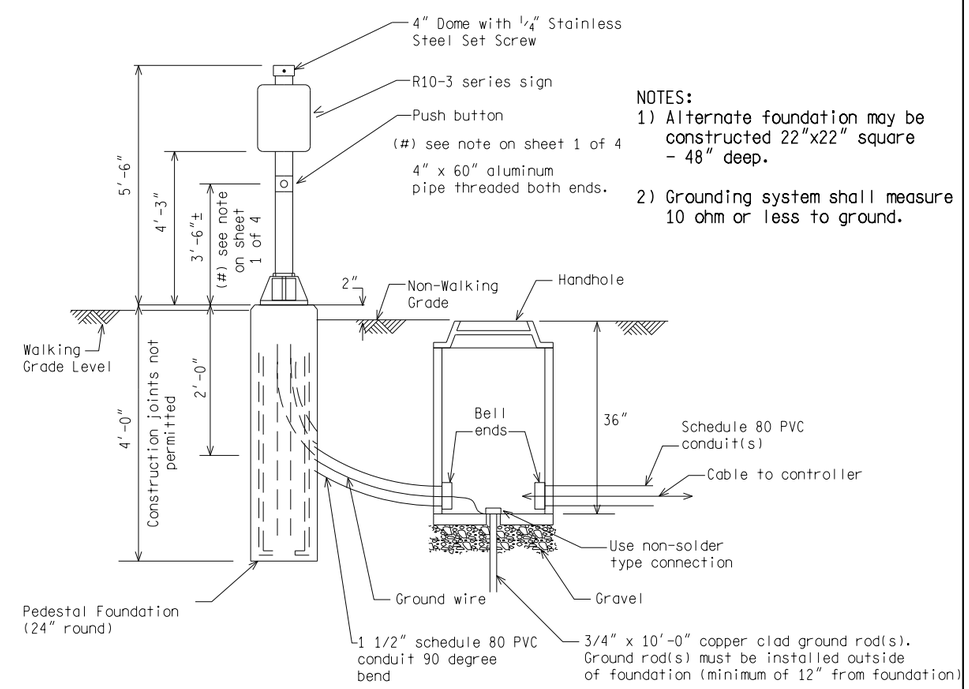

PUSH BUTTON PEDESTAL

NOT TO SCALE

MICHIGAN DEPARTMENT OF TRANSPORTATION
BUREAU OF HIGHWAYS DELIVERY STANDARD PLAN

(SPECIAL DETAIL)

FHWA APPROVAL DATE

File: RefDoc/TR/Signals/Web/Sp Det/Fin/SIG400A.dgn Rev. 02/16/17

PLAN DATE

SIG-400-A

SHEET 2 of4

AS-LET PLAN REVISIONS							
NO.	DATE	AUTH	DESCRIPTION	NO.	DATE	AUTH	DESCRIPTION

MDOT Michigan Department of Transportation

FILE:

DATE:

DESIGN UNIT:

TSC:

CS:

JN:

DRAWING

SHEET

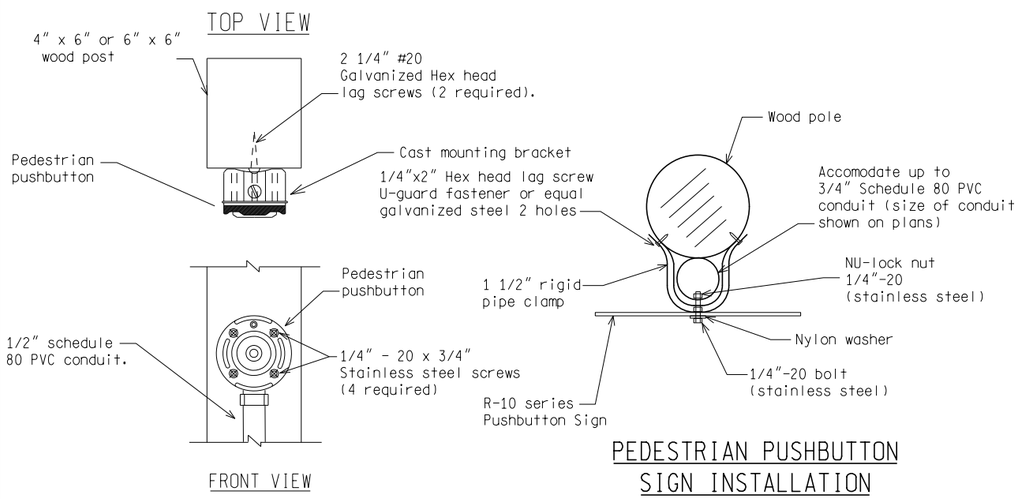

PEDESTRIAN PUSHBUTTON INSTALLATION ON WOOD POST

PEDESTRIAN PUSHBUTTON SIGN INSTALLATION ON WOOD POLE

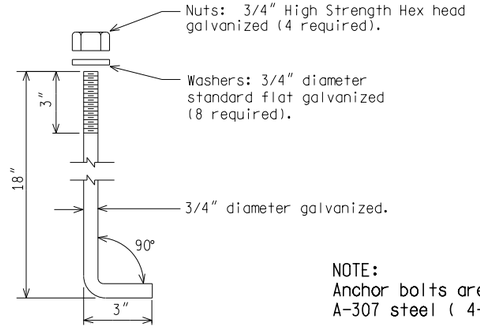

NOTE:
Anchor bolts are to be ASTM A-307 steel (4-required)

ANCHOR BOLT DETAIL

NOT TO SCALE

MICHIGAN DEPARTMENT OF TRANSPORTATION BUREAU OF HIGHWAYS DELIVERY STANDARD PLAN	(SPECIAL DETAIL) FHWA APPROVAL DATE		SIG-400-A	SHEET 3 of4
File: RefDoc/TR/Signals/Web/Sp Det/Fin/SIG400A.dgn Rev. 02/16/17		PLAN DATE		

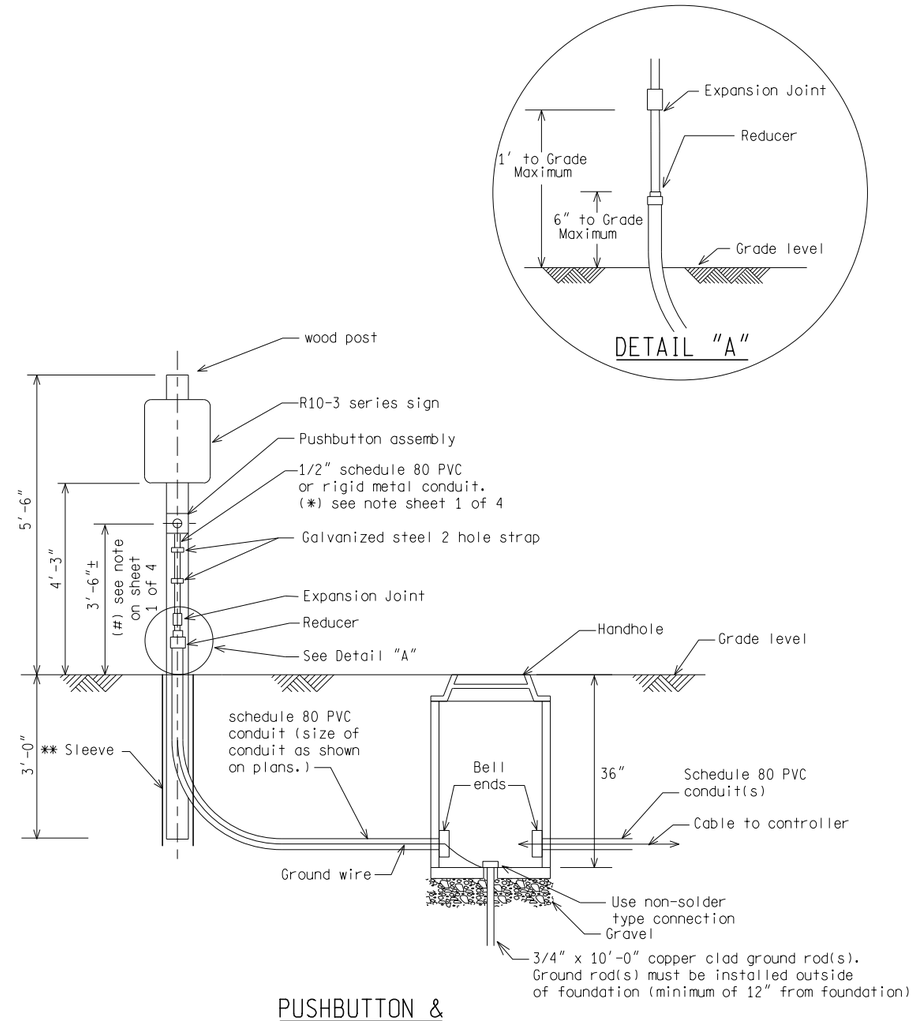

PUSHBUTTON & WOOD POST

** Refer to Standard Plan for Wood Posts

NOT TO SCALE

MICHIGAN DEPARTMENT OF TRANSPORTATION BUREAU OF HIGHWAYS DELIVERY STANDARD PLAN	(SPECIAL DETAIL) FHWA APPROVAL DATE		SIG-400-A	SHEET 4 of4
File: RefDoc/TR/Signals/Web/Sp Det/Fin/SIG400A.dgn Rev. 02/16/17		PLAN DATE		

AS-LET PLAN REVISIONS							
NO.	DATE	AUTH	DESCRIPTION	NO.	DATE	AUTH	DESCRIPTION

MDOT Michigan Department of Transportation

FILE:	DATE:	CS:	DRAWING	SHEET
	DESIGN UNIT:	JN:		
	TSC:			